Plasma Cathode Electron Guns

Dr. Dan M. Goebel

Work performed at HRL

PLASMA CATHODE CONCEPT

HUGHES
RESEARCH LABORATORIES

DMG-1/97

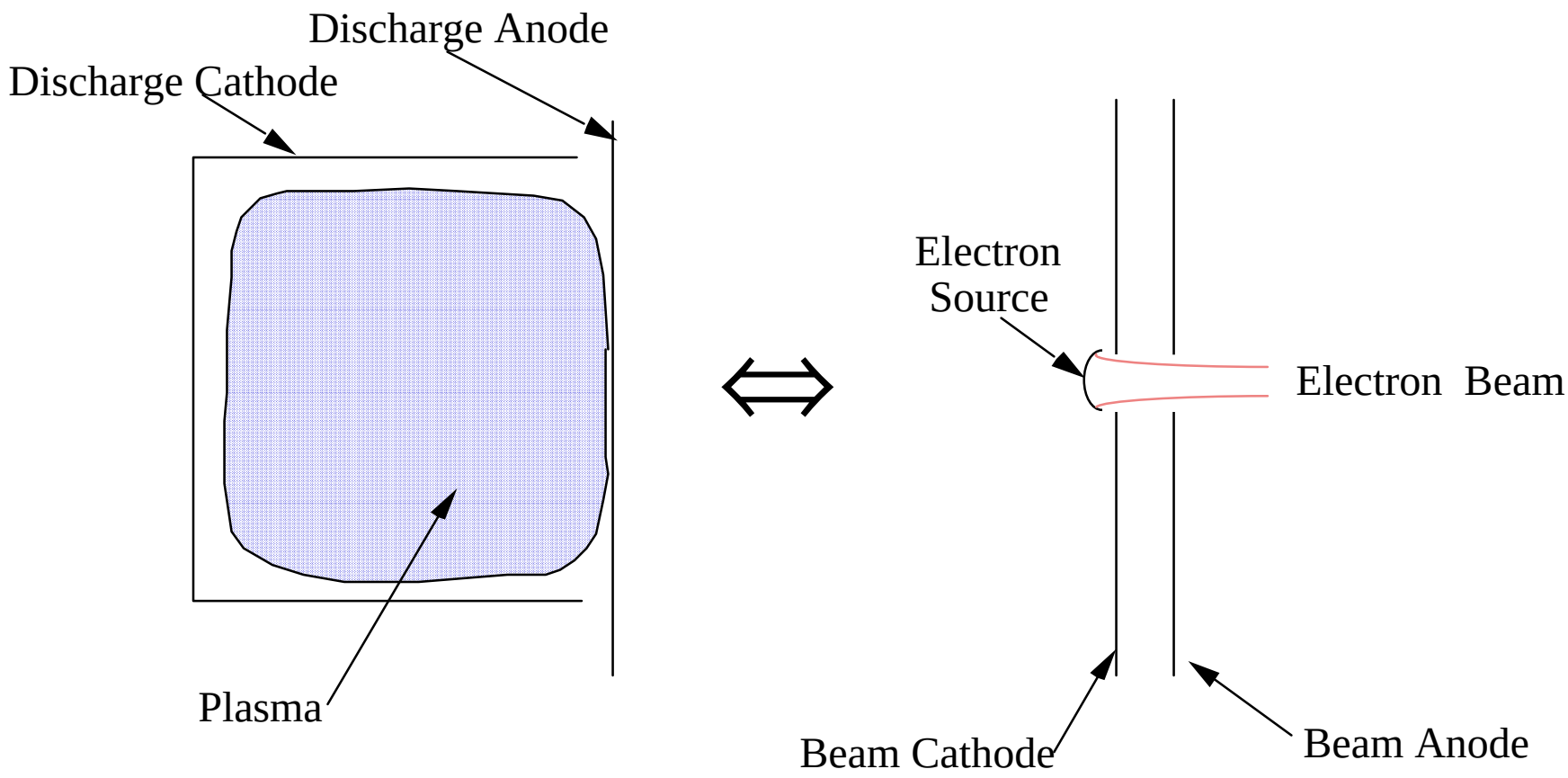

PLASMA GENERATION

EXTRACTION/ACCELERATION

PLASMA CATHODE FEATURES

- **Eliminate back-ion bombardment of electron emitting surface**
  - -long life
  - - de-couple electron generation from accelerator

- **Utilize high electron current densities available from plasmas**

- **Utilize unique accelerator designs for high perveance**
  - - multi-aperture accelerators
  - - DC high voltage, beam current is modulated by the plasma
  - - Grid modulated beam for high repetition rates
  - - long pulses
  - - variable perveance operation

PLASMA CATHODE DESIGN

PLASMA GENERATION

- Glow discharge
- Thermionic Discharge

EXTRACTION/ACCELERATION

- Single aperture
- Multiple aperture

Glow Discharge Plasma Generation

HUGHES
RESEARCH LABORATORIES

DMG-1/97

Start with a very simple glow discharge plasma generator

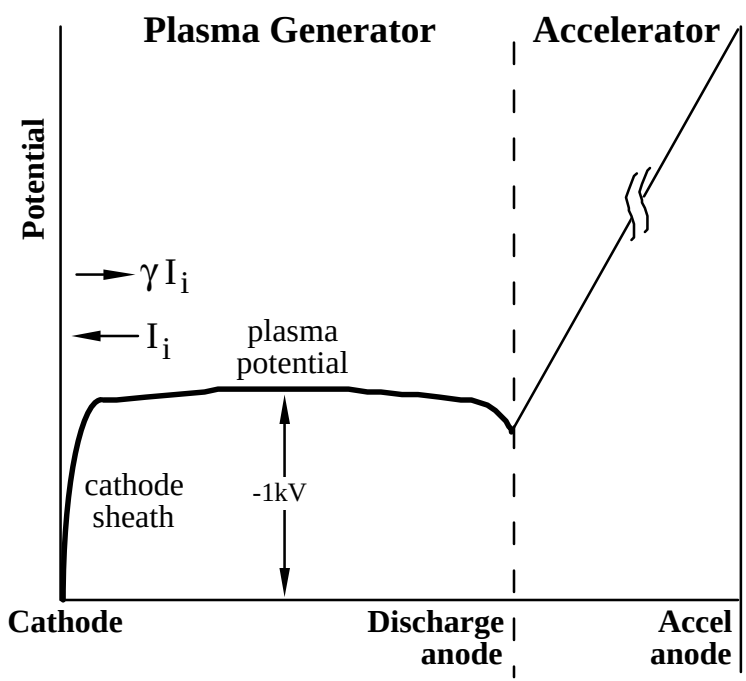

Minimum striking pressure

$$n_o = \frac{A_a}{4\,\gamma\ \sigma\ V}$$

A_a = anode area

γ = secondary electron yield

σ = ionization cross section

V = generator volume

Typically ≈ 5 microns

note: $A_{anode} \approx (m_e/m_i)^{1/2} A_{cathode}$

POWER SUPPLY

HUGHES
RESEARCH LABORATORIES

DMG-1/97

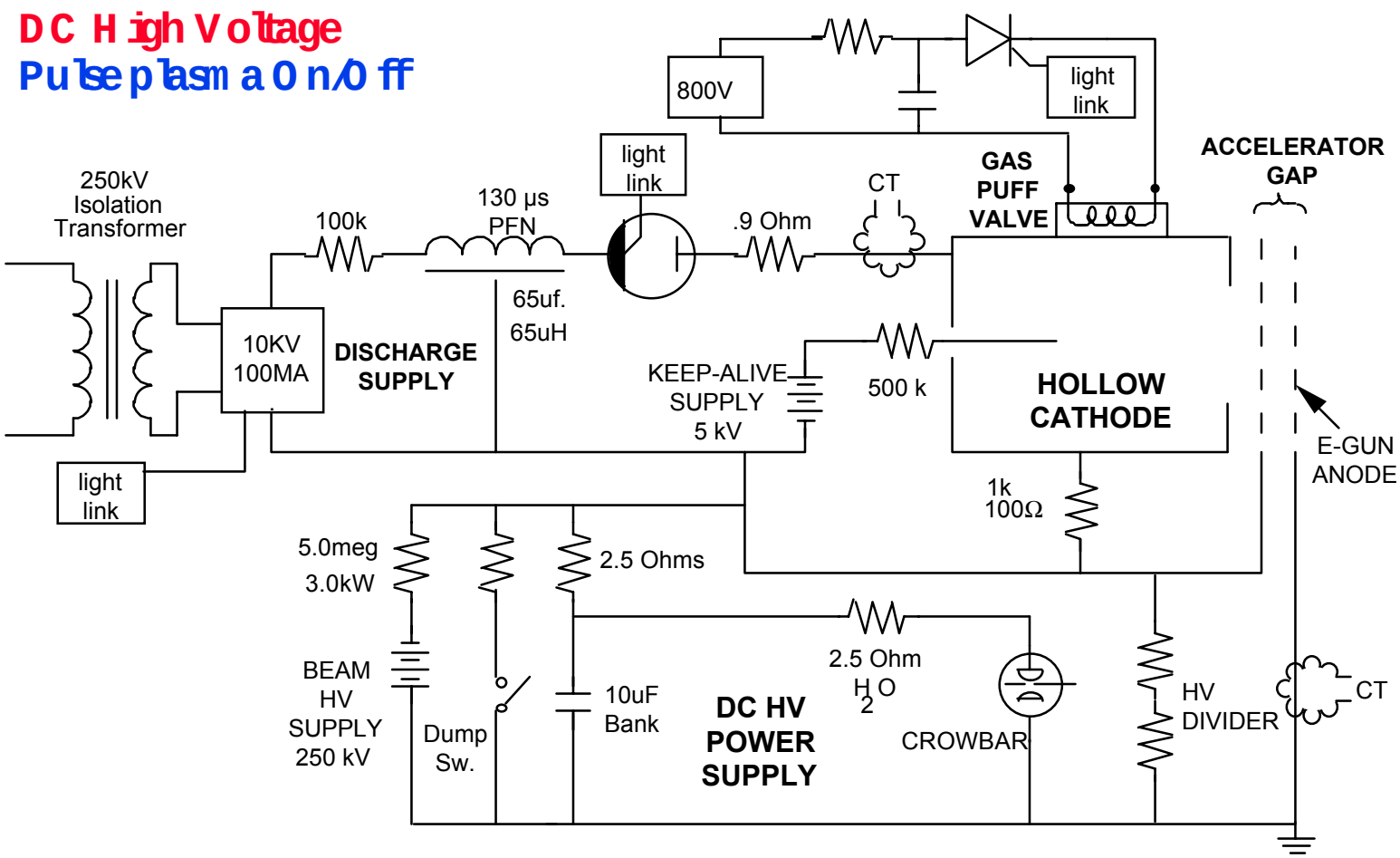

Accelerator Considerations

HUGHES
RESEARCH LABORATORIES

Single aperture

Child/Langmuir, planar accelerator

$$J = P \frac{V^{3/2}}{d^2}$$

$$I = P \frac{V^{3/2}}{d^2} \text{ Area } = \frac{V^{3/2}}{d^2} \text{ šr}^2$$

For r<2d (good optics)

$$\text{Perveance} = \frac{I}{V^{3/2}} = \frac{P\text{š}}{4} = 2\ \mu P$$

Multiple apertures

Total Perveance = Sum of Perveance of each aperature

$$J = P\ T \frac{V^{3/2}}{d^2}$$

$$J = P\ T\ E \frac{V^{1/2}}{d}$$

For r<2d (good optics)

V = 100 kV

E =100 kV/d=1 cm

T = 68%

$J = 50\ A/cm^2$ (averaged over entire grid)

Total Perveance = 78 μP (3" dia. accelerator)

Perveance per aperture = 78/150 = 0.5 μP

GLOW-DISCHARGE PLASMA CATHODE E-GUN

HUGHES
RESEARCH LABORATORIES

DMG-1/97

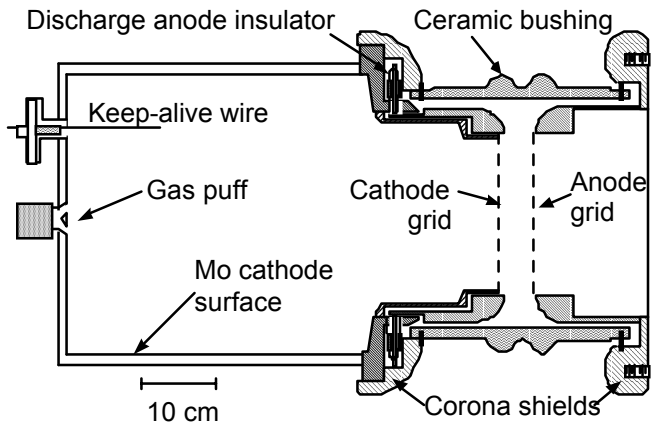

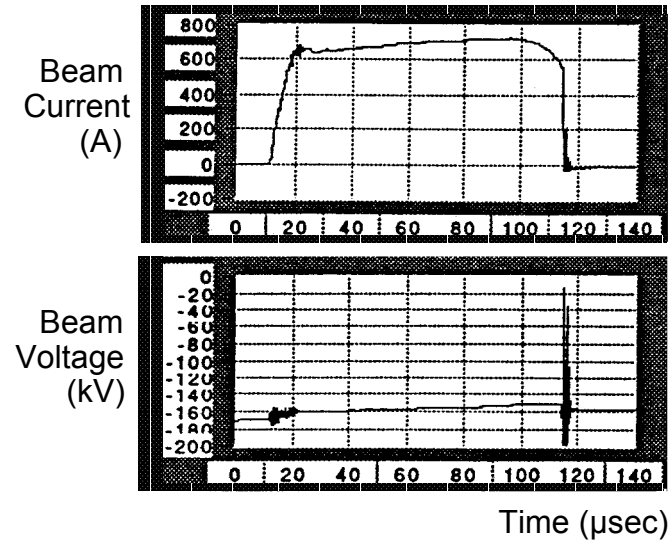

- **Low duty plasma cathode electron source**
- **Helium gas-puff fed glow discharge**
- **Multi-aperture, high perveance (>10 μperv) accelerator**

D.M. Goebel and R.M. Watkins, "High Current, Low Pressure Plasma Cathode Electron Gun", Review of Scientific Instruments, **71**, 388-398 (2000).

GLOW-DISCHARGE PLASMA CATHODE E-GUN

HUGHES
RESEARCH LABORATORIES

DMG-1/97

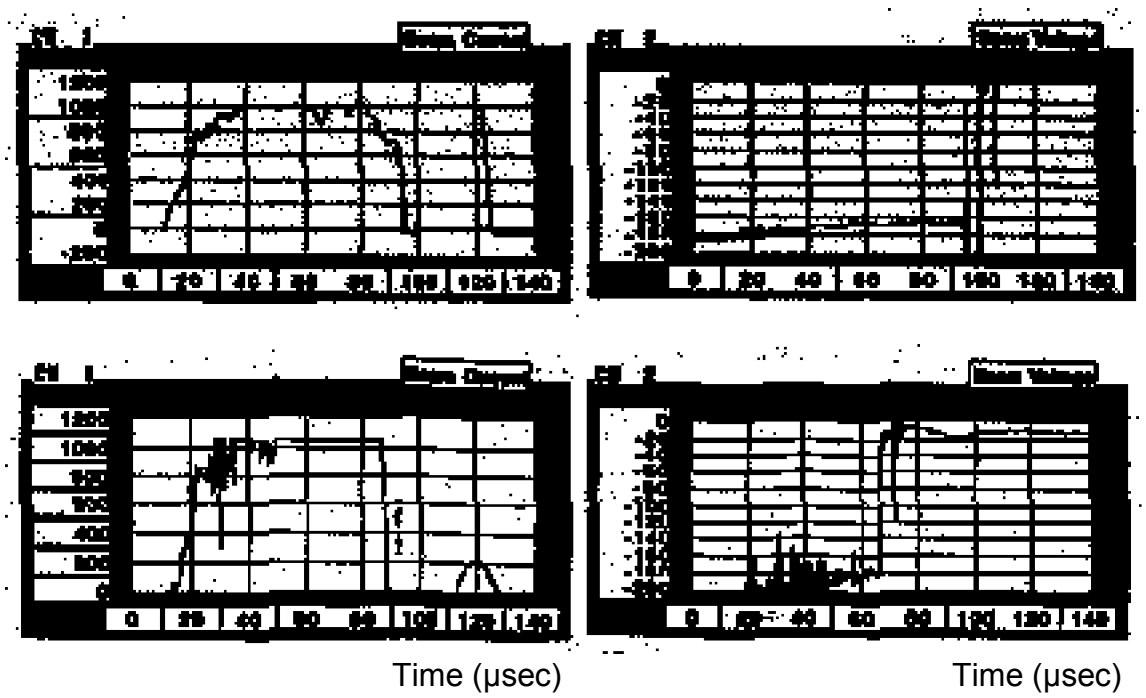

1 kA, 190 kV
3.5 A/cm^2
Perv=12 μP

1.2 kA, 200 kV
4.2 A/cm^2
Perv=13.4 μP

Shorter pulse lengths permit higher peak currents

GLOW-DISCHARGE PLASMA CATHODE E-GUN

HUGHES
RESEARCH LABORATORIES

DMG-1/97

45 cm^2 grid area

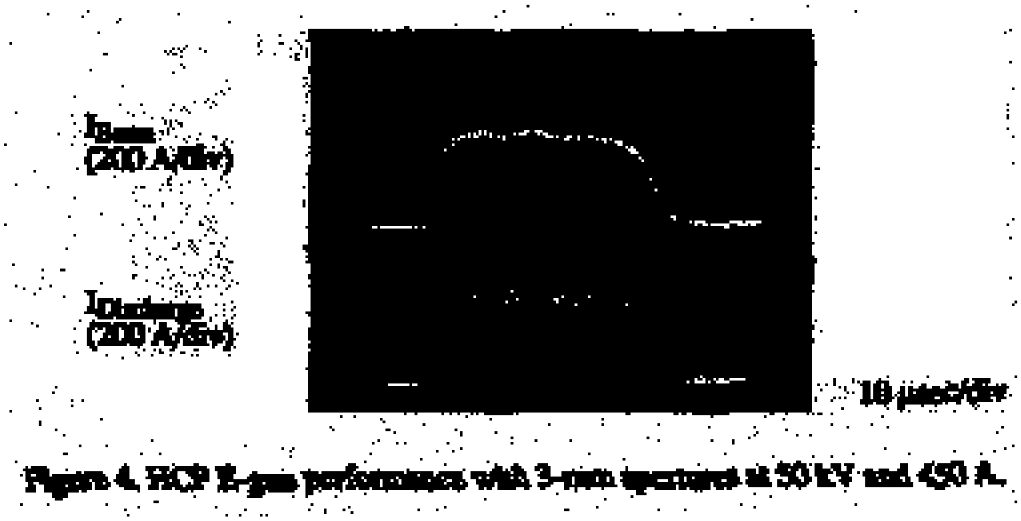

450 A, 60 kV
10 A/cm^2
Perv=30.6 μP

Shorter pulse lengths permit higher peak currents

Peak values: 750 A, 16.7 A/cm^2, Perveance = 33 μP, Voltage 80-120 kV

Higher Voltage and Current Issues

- **High voltage is applied DC to a large area**
  - corona and breakdown issues limit stress to <100 kV/cm
  - pulsing voltage will improve this significantly

- **Beam current (current density) presently limited by long pulses**
  - edge electrons lead to anode bombardment and gas release
  - present 100 μsec system limited to ≤0.5 times the perveance limit to avoid arcing
  - operation at 1 to 10 μsec pulses permit nearly twice the present current density (we have run at 50 A/cm^2 for <10 μsec pulses)

- **Pulse rise time limited to plasma rise time**
  - gate the first grid to hold off plasma during rise time ("grid modulation" standard in TWTs)

Gas Pressure Problems

What if ≥5 microns is too high for the application?

- **Utilize a gas puffer**
  - transient differential pressure generated
    (sufficient gas pressure to strike discharge, pulse over before gas arrives downstream)
  - low (<100 Hz) PRF possible

- **Change plasma generator**
  - Utilize a low pressure thermionic discharge (later)
  - Use another plasma generator

- **Gas pressure issue**

Current Density from Plasmas

HUGHES
RESEARCH LABORATORIES

DMG-1/97

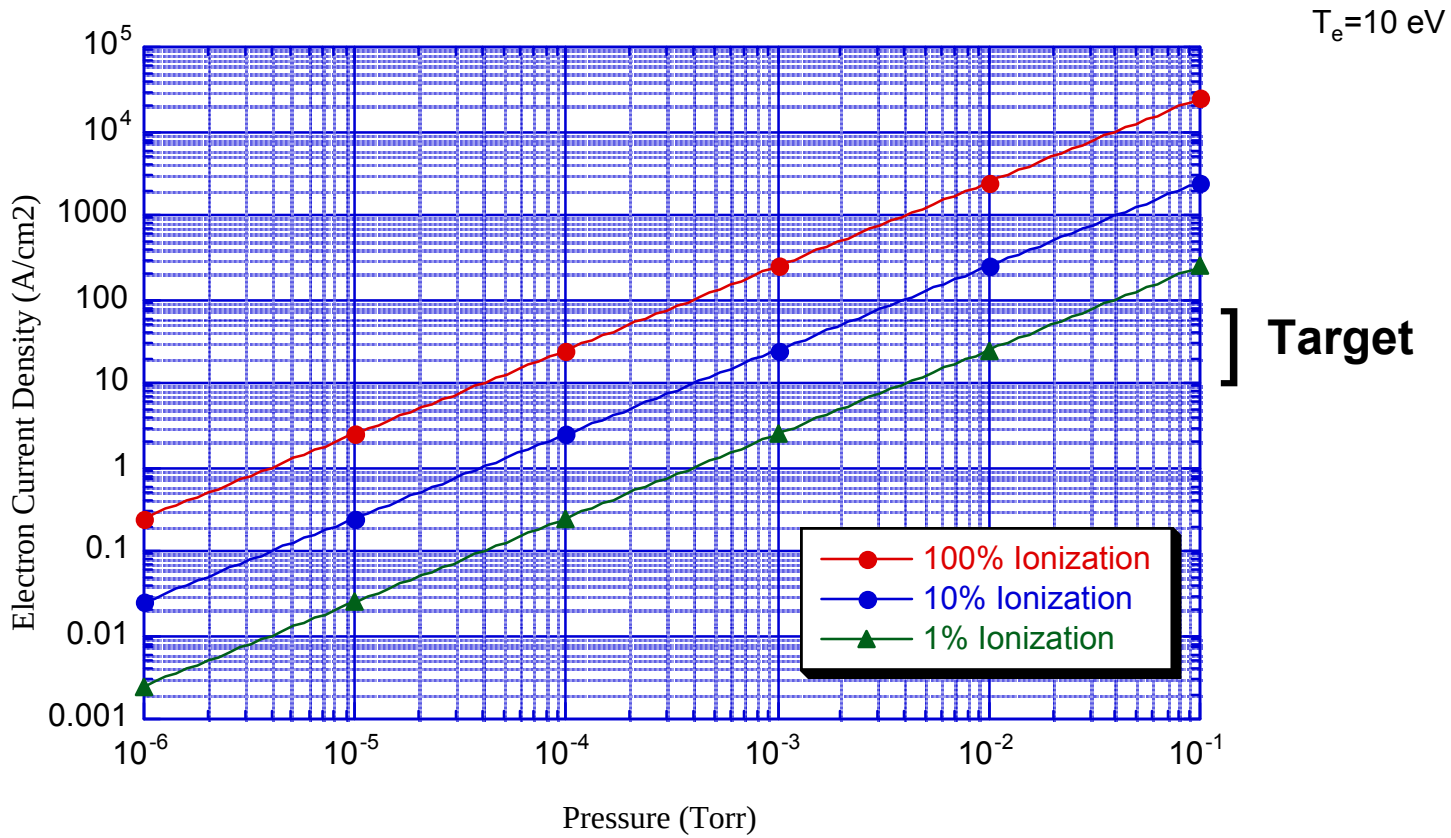

Finite gas pressure required

Gas Pressure Issues

HUGHES
RESEARCH LABORATORIES

DMG-1/97

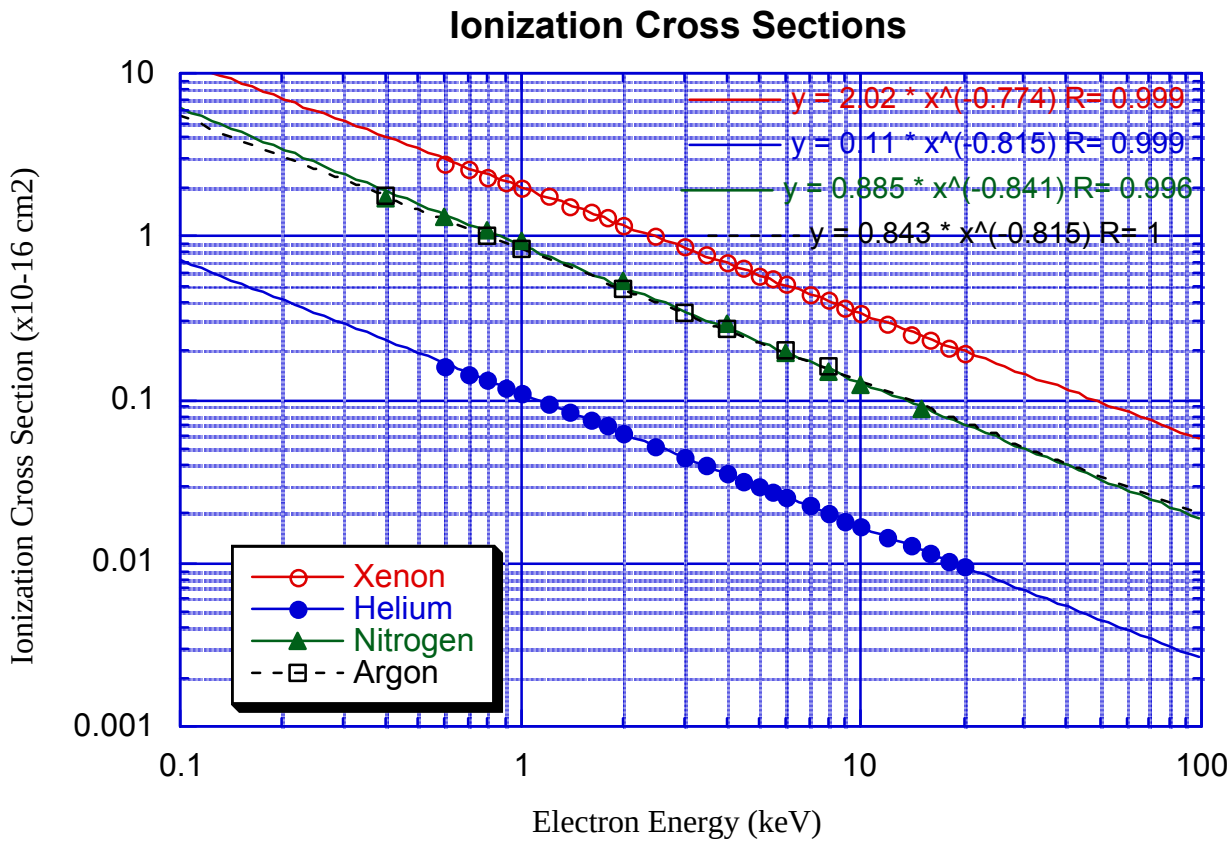

Very Low Pressure Operation

- **Utilize a thermionic discharge**
  - discharge current carried by primary electrons, not ions
  - reduced requirement on ion density and therefore plasma density

- **Utilize an electron confinement** technique to improve ionization eff.
  - magnetic multipole confinement

- **Utilize a large, easily ionizable gas**
  - xenon
  - multiply charged states reduce gas pressure requirement

- **Utilize grid modulation to improve rise time**

THERMIONIC PLASMA CATHODE E-GUN

HUGHES
RESEARCH LABORATORIES

DMG-1/97

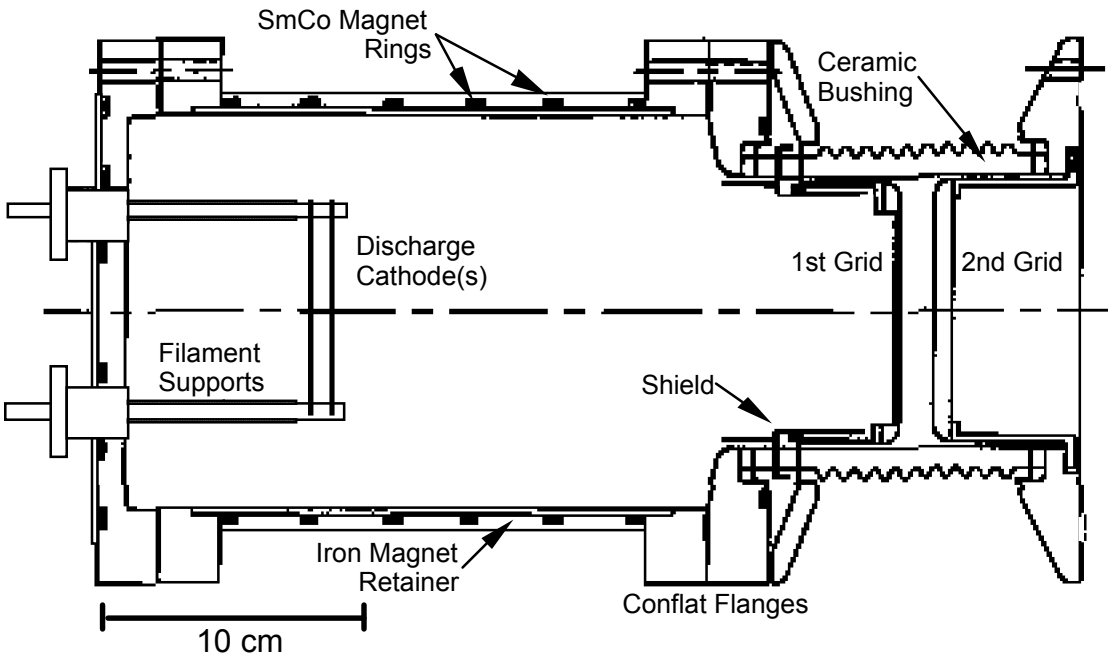

- **Thermionic discharge in low pressure gas (<10^{-4} Torr Xenon)**
- **Permanent magnet plasma confinement to improve ionization efficiency**
- **Multi-aperture, high perveance (>10 μperv) accelerator**

D.M. Goebel and R.M. Watkins, "High Current, Low Pressure Plasma Cathode Electron Gun", Review of Scientific Instruments, **71**, 388-398 (2000).

Magnetic Multipole Confinement

HUGHES
RESEARCH LABORATORIES

DMG-1/97

"ring-cusp"

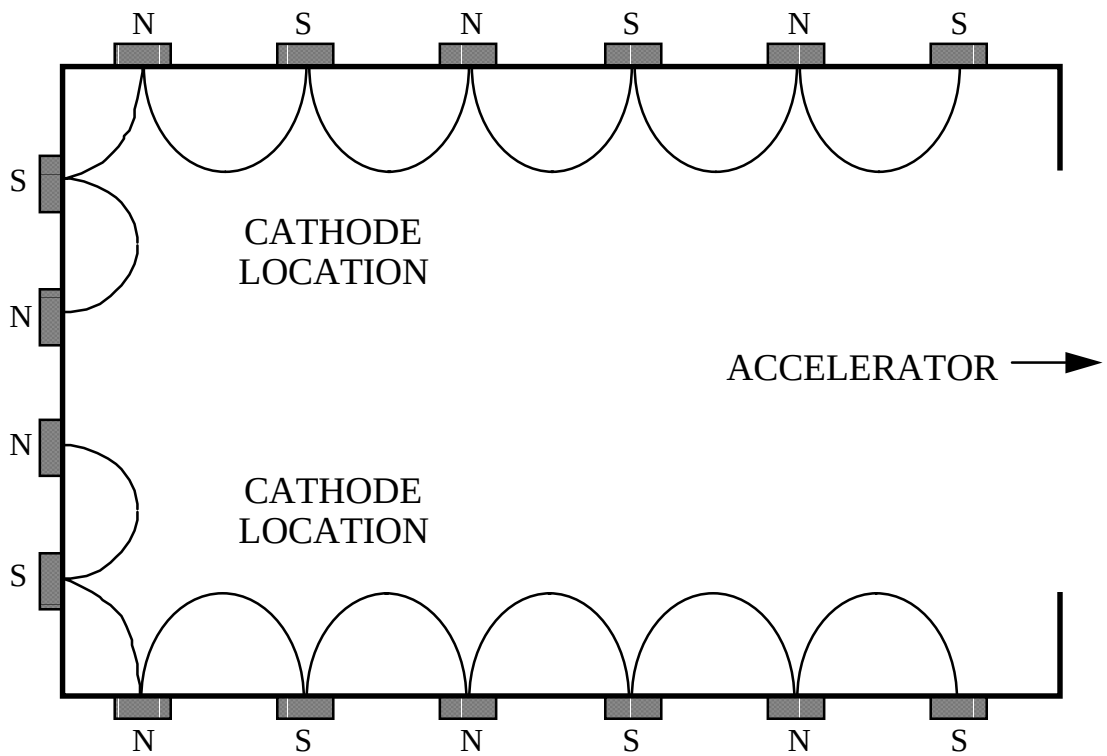

- "Bucket" plasma generator increases electron path length

Accelerator Design

HUGHES
RESEARCH LABORATORIES

DMG-1/97

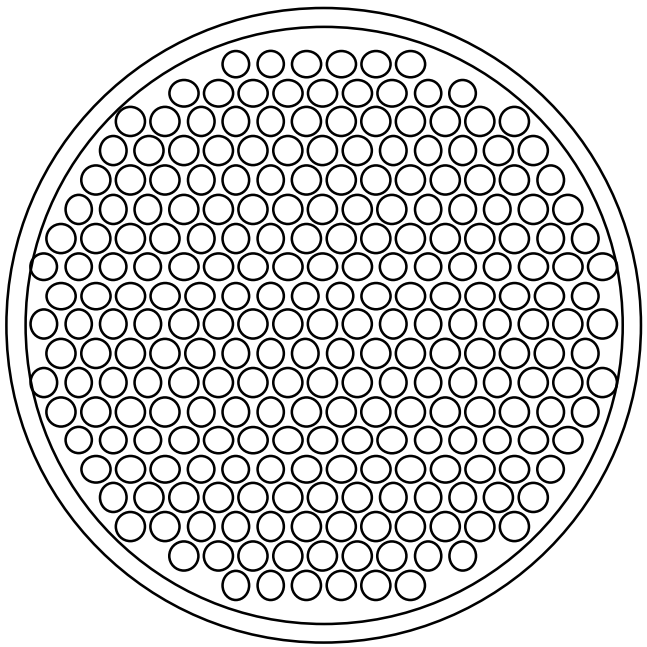

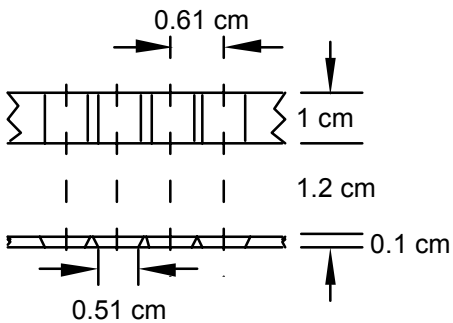

257 apertures, 10.8 cm O.D.
(91.5 cm^2)

Perveance ≤ 36 μP
(achieved experimentally)

Power Supply Design

HUGHES
RESEARCH LABORATORIES

DMG-1/97

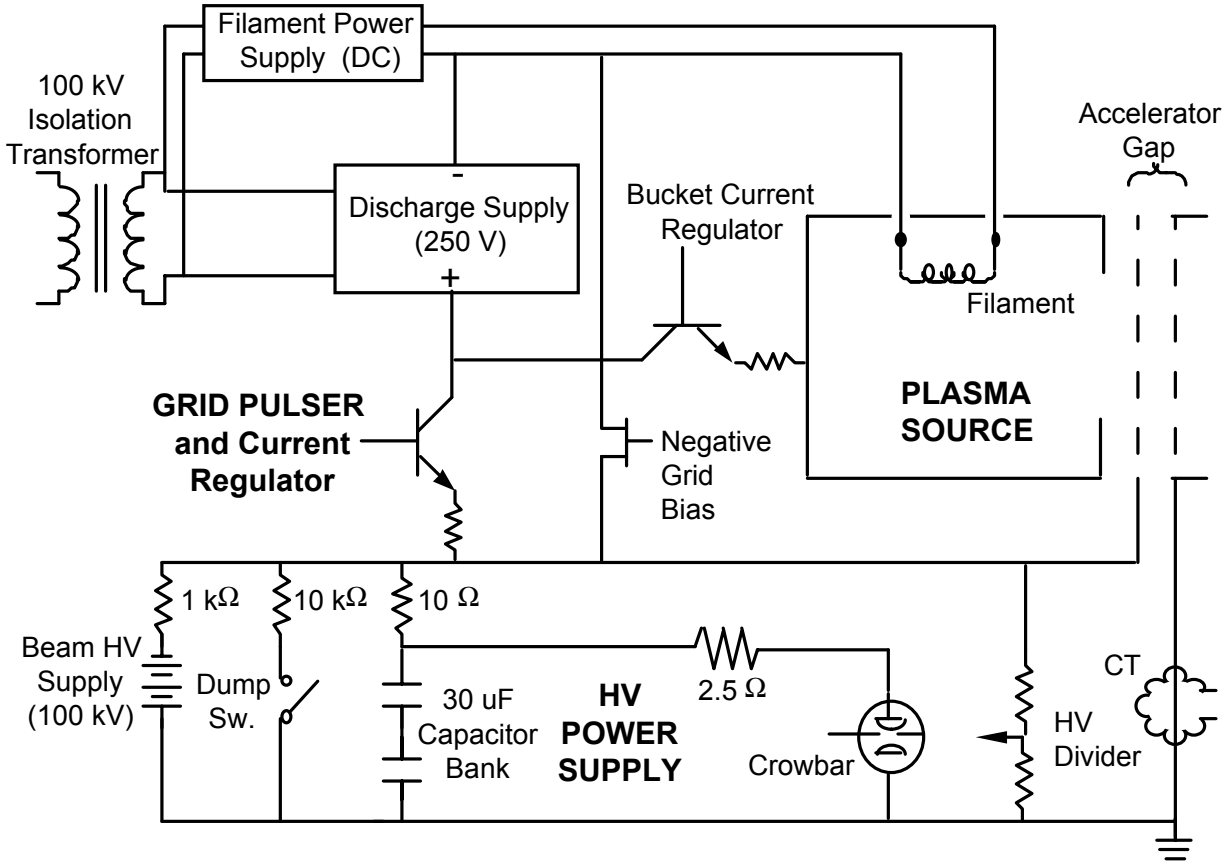

Accelerator Performance

HUGHES
RESEARCH LABORATORIES

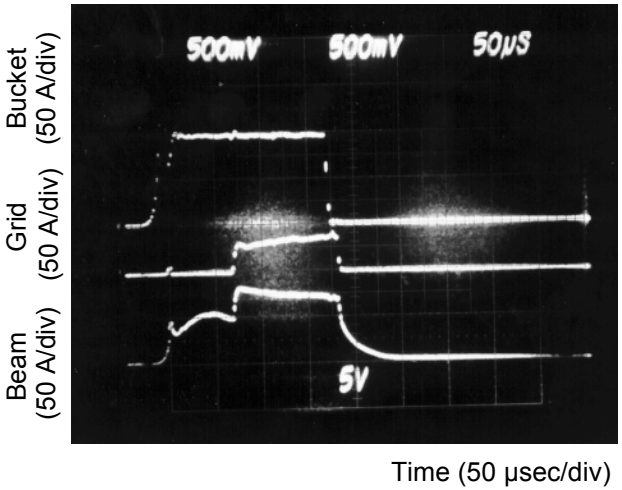

No mesh on 1st grid

200 V grid negative bias insufficient to cut off plasma to accelerator

PCE-Gun Performance

HUGHES
RESEARCH LABORATORIES

DMG-1/97

80 kV

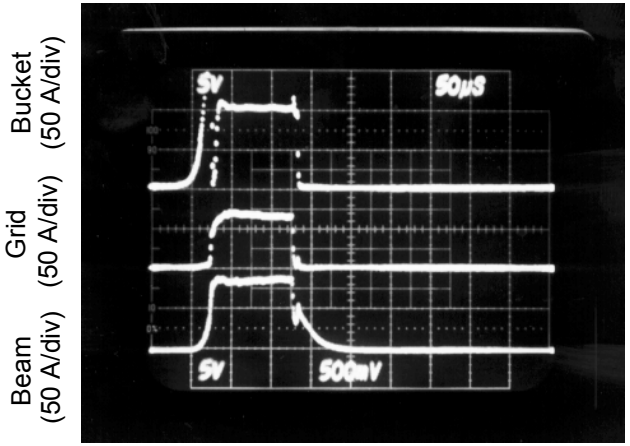

With mesh on 1st grid

- “bucket” current generates plasma
- grid pulse give good rise time for (low) pressures of 1 to 10 x10^{-5} Torr Xe
- 4-5 µP total perveance

PCE-Gun Performance

HUGHES
RESEARCH LABORATORIES

DMG-1/97

75 kV

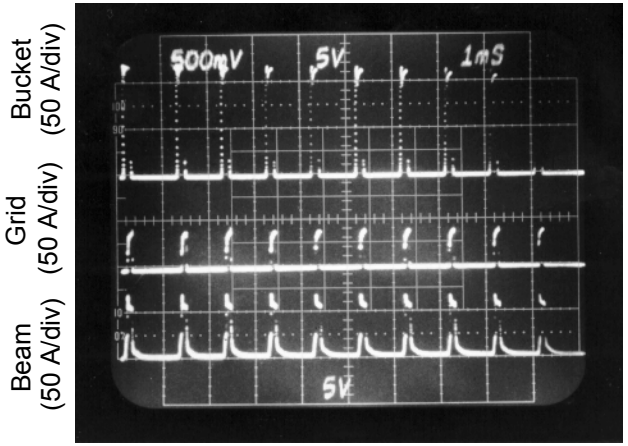

Time (1 msec/div)

- High repetition rate possible (>1 kHz)
- High duty achieved (>10%)

Variable Perveance Operation

HUGHES
RESEARCH LABORATORIES

DMG-1/97

80 kV at start

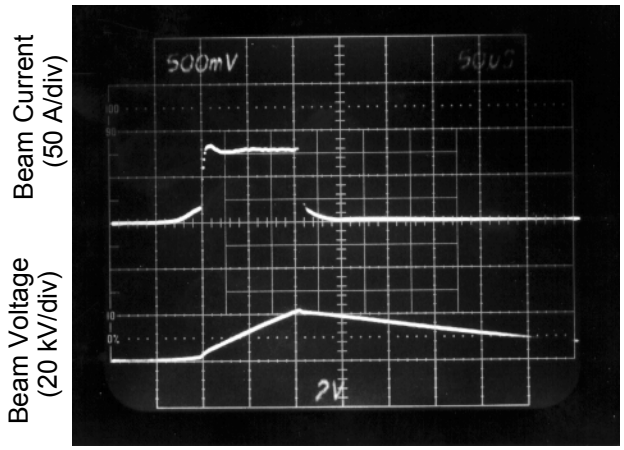

(a)

Time (50 μsec/div)

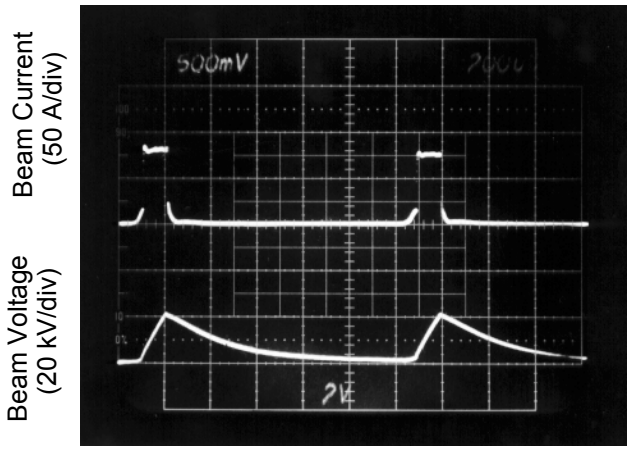

(b)

Time (200 μsec/div)

- Constant current at variable voltage
- Programmable current at fixed voltage

Issues with Low Pressure Operation

HUGHES
RESEARCH LABORATORIES

DMG-1/97

Plasma Rise Time

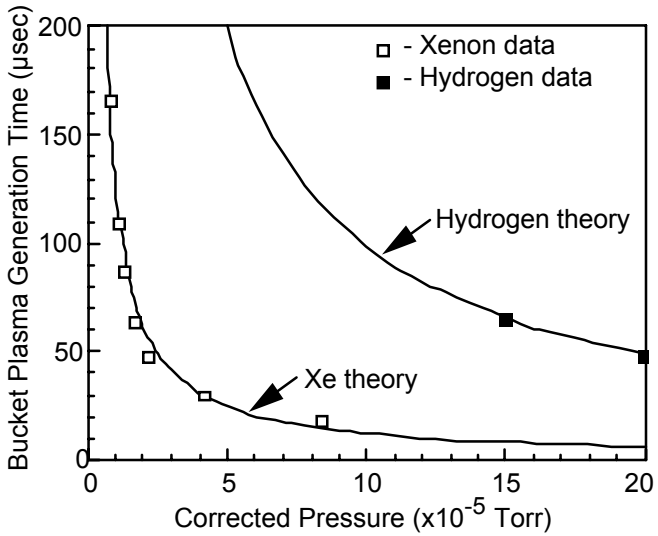

(and delay)

Pressure variations

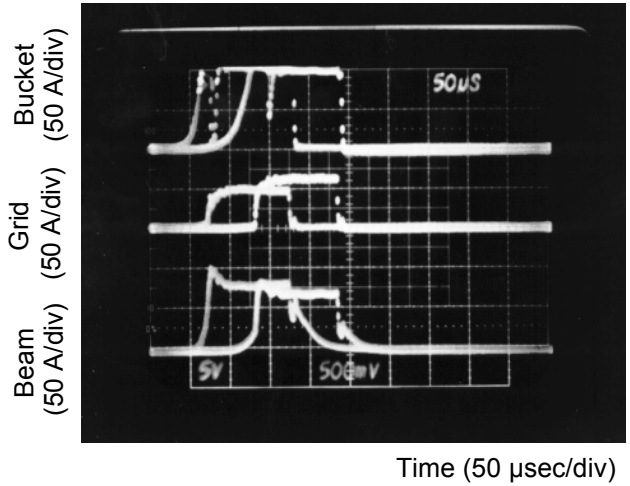

(need additional circuit modifications to stablize I_b)

PLASMA CATHODE SUMMARY

HUGHES
RESEARCH LABORATORIES

DMG-1/97

	Maximum Achieved*	Typical HCP	Typical PCE
Voltage	250 kV	200 kV	100 kV
Current	1200 A	700 A	200 A
Perveance	50 µP	< 20 µP	< 10 µP
Pulse length	1 msec	100 µsec	100 µsec
Duty	CW	< 1%	10%
		glow discharge	thermionic discharge

*Non-simultaneously

CONCLUSION

- **Plasma cathodes have many good features**
  - long life
  - high current and current density
  - high perveance and variable perveance operation
  - high repetition rates
  - high duty

- **Plasma cathodes have many issues**
  - finite gas pressure
  - rise time and delay at low pressures
  - stability/reproducibility at high repetition rates
  - complex design and circuitry for high duty operation